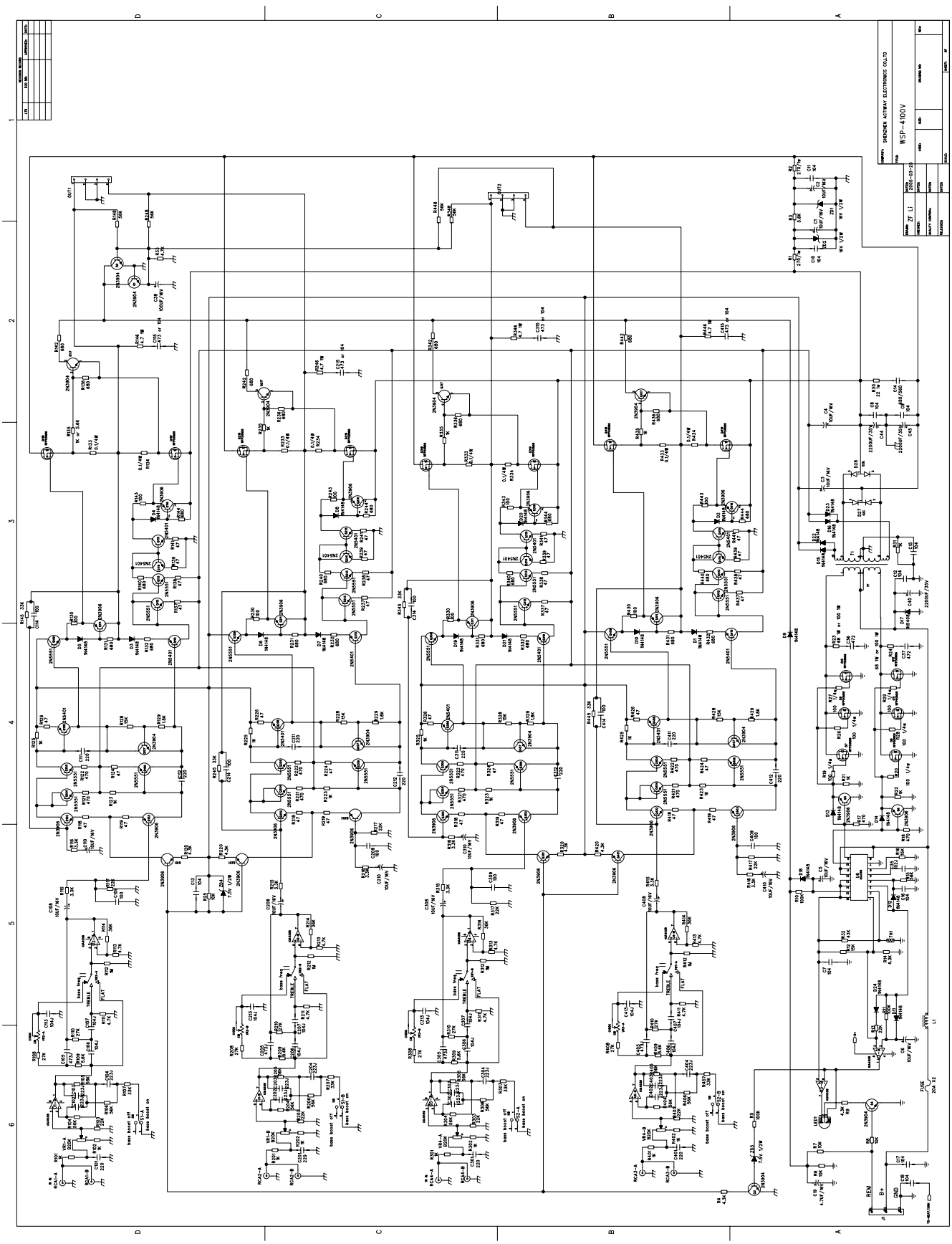vr-4ch.sch-1 - Wed Apr 01 20:50:46 2009